Installation and Operating Instructions

Xcell 150 QV
Xcell 150 QVW

Mechanical Ventilation Unit with Heat Recovery

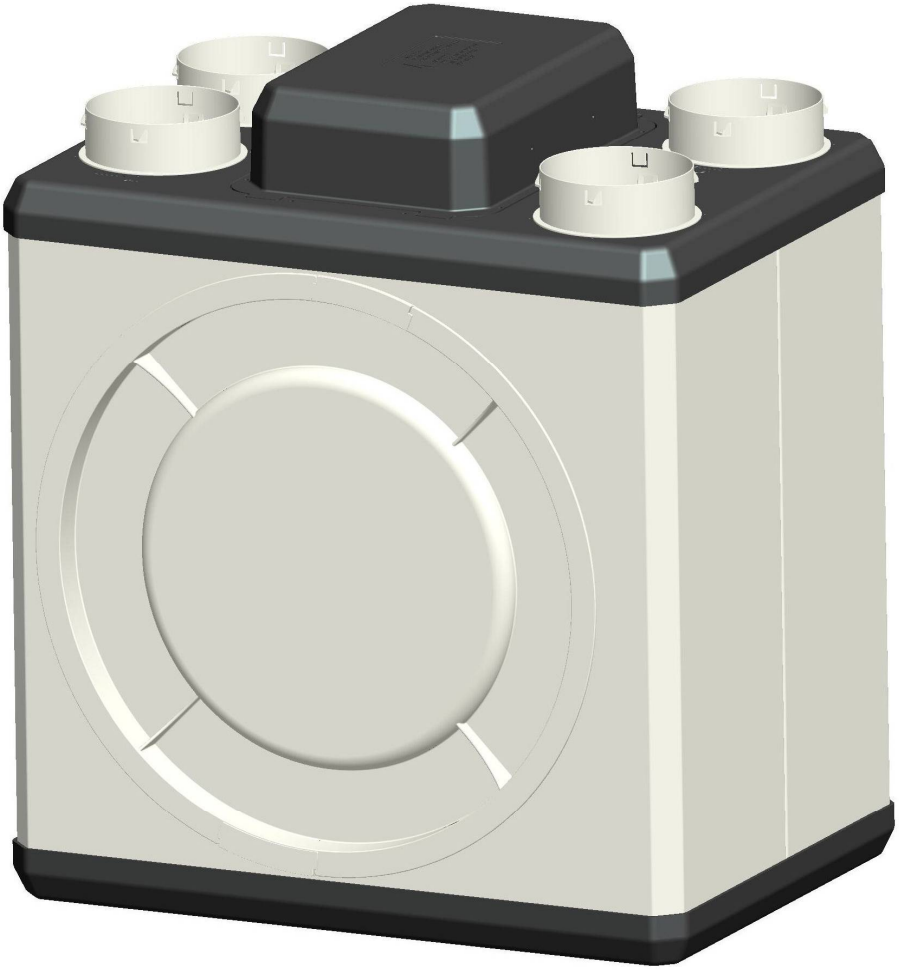

Please ensure these instructions are kept safe and accessible at all times.

Table of Contents

1 General Information 3
2 Components and Materials of Construction 3
3 Regulations and Safety Instructions 3
4 Application and Planning 4
4.1 Application 4
4.2 Operation Overview 4
4.3 MVHR installation planning 4
5 Assembly and Installation 5
5.1 General information: 5
5.2 Impact noise reduction: 5
5.3 Connecting the ducting: 5
5.4 Duct connections: 6
5.4.1 Left-handed installation duct connections (viewed from the top of the MVHR) 6
5.4.2 Retaining bracket to prevent extraction of the heat exchanger 6
5.5 Installation 7
5.5.1 Wall-mounting the MVHR 7
5.5.2 Installation of the ducting 7
5.6 Condensate drain 7
5.7 Typical installation example 7
5.8 Installation dimensions 8
6 Technical Data 9
6.1 Air volume flow rates can be adjusted on the PCB by service technicians only: 9
6.2 Adjustment of air volume flow rate (m^3/h) for supply air / exhaust air fans: 9
6.3 Port pins for the connection of a voltmeter: 9
6.4 Factory speed settings: 9
6.5 Technical data: 10
6.6 Applied Energy accessories for manual or automatic operation: 10
6.7 Applied Energy spares available: 10
7 Electrical Wiring Diagrams 11
7.1 Manual 2-speed switch (Xcell 150 QV only) 11
7.2 PCB with 3-speed switch (Xcell 150 QVW only) 12
7.3 PCB with 3-speed switch & CO_2 sensor (Xcell 150 QVW only) 13
7.4 PCB with 3-speed switch, CO_2 sensor & up to 3 off Humidistats (Xcell 150 QVW only) 14
7.5 PCB with 3-speed switch & up to 4 off Humidistats (Xcell 150 QVW only) 15
8 Controller Functions 16
8.1 MS2 manual 2-speed switch 16
8.2 Q3SP automatic 3-speed switch 16
8.3 QCO_2 CO_2 Sensor 17
8.4 QHS humidistat sensor 17
8.5 Automatic defrost (anti-icing protection) 18
8.6 Fan fault monitoring 18
9 Maintenance 19
9.1 Filters 19
9.2 Removing and re-fitting the filters 19
9.3 Air Filter Box (optional extra accessory) 19
9.4 Cleaning the heat exchanger 20
10 Malfunctions 20
10.1 Fault locating table 20
10.2 Installation of replacement fans 21
11 Customer Notes (to record details of filter / recuperator cleaning etc.) 23
Maintenance Log 26
GUARANTEE 28

1 General Information

Read all these instructions & warnings fully before commencing installation.

These installation and operating instructions must be observed during installation, operation, service and maintenance. This MVHR should only be installed and repaired by a qualified service technician. Improper repairs may expose the user to considerable danger. Under current regulations, the installation and operating instructions must be accessible at all times and must be handed to the technician for reference whenever work is being done on the MVHR. We would therefore ask that upon moving out of these premises, you pass the instructions on to the next tenant/owner. Should there be any visible damage the MVHR must not be connected. In this case, it is imperative that you contact your supplier. Only use original spares in order to avoid secondary damage. Please ensure that all packaging materials are disposed of properly in accordance with current environmental requirements.

2 Components and Materials of Construction

The MVHR comprises of the following main components:

Outer Panels:
PE plastic, white
PS plastic, black

Maintenance access cover:
PS plastic

Ducting spigots, Ø 125mm:
PP plastic, light grey

Internal air paths / casing:
EPP, black

Filters:
G4 fitted as standard. External filter box F5 or F7 available as special accessory

Heat exchanger:
The heat exchanger is made from fully recyclable PS plastic. The heat exchanger integrated into the MVHR is based on the counter flow principle with triangular air ducts for supply and exhaust air.

Fans:
Energy-saving EC DC fans with optimal efficiency.

3 Regulations and Safety Instructions

The Xcell150 MVHRs are tested in accordance with the low-voltage directive 2006/95/EC and EMC directive 2004/108/EC.

This appliance is not intended for use by persons (including children and the infirm) with reduced physical, sensory or mental capabilities, or lack of experience and knowledge, unless they have been given supervision or instruction concerning use of the appliance by a person responsible for their safety.

Ensure that all relevant safety precautions (correct eye protection and protective clothing etc) are taken when installing, operating and maintaining this MVHR. Observe the safety regulations and warnings contained in this manual at all times. Failure to do so may result in damage to the unit or personal injury.

This MVHR is intended for connection to fixed wiring. A means for disconnection must be incorporated in the fixed wiring. Installations and wiring must conform to current IEE Regulations (UK), local or appropriate regulations (other countries). All installations must be supervised by a qualified electrician. It is the installer's responsibility to ensure that the appropriate building codes of practice are adhered to.

This MVHR must not be installed near to sources of direct heat such as cookers/grills or where ambient temperatures may exceed 50ºC.
When the MVHR is installed in a room containing a fuel burning appliance, precautions must be taken to avoid the backflow of gases into the room from the open flue of the fuel burning appliance.

The instructions on periodic cleaning and/or changing of the filters, the air inlet/outlet valves and the air inlet/outlet grilles must be strictly observed.

The unit may only be connected to a 220-240V AC power supply.

The following applications / installations are prohibited:

- The use of excessive fat-contaminated exhaust air, extracting explosive gases, extracting particle-contaminated air, extracting adhesive particulate matter.
- Installing the MVHR outdoors
- Connecting extractor hoods in the ventilation system

Servicing of the MVHR may only be carried out by a qualified service technician. Contact details for authorised servicing by Xpelair approved technicians can be found on the back of this booklet.

4 Application and Planning

4.1 Application

This MVHR is intended for installation in ventilation systems in houses, residential buildings and light commercial applications e.g. offices and meeting rooms etc. Upon completion of the system, there should be no safety, health or environmental risks present. The manufacturer of the MVHR assumes no liability for this.

4.2 Operation Overview

Using two fans, each above a filter in separate ducts, the MVHR draws in external air from the outside and exhaust air from odour-contaminated and moisture-laden rooms (kitchen, bathroom, WC) in the house. Both of these air flows are passed through a cross counter flow heat exchanger whereby the exhaust air releases heat and the external air absorbs heat. The air ducts are separated from one another to prevent odour pollution between external and exhaust air.
Using suitable air ducts and adjustable air inlet valves (separate accessories), the heated external air is blown into the house and the cooled exhaust air is ducted out of the building.
There are numerous accessories available for controlling the MVHR, see section 6.6.

4.3 MVHR installation planning

MVHR system designs must comply with the current standards or the approved edition on the original planning consent.

Approved documents for Building Regulation in England and Wales:

Part B:

- Approved Document B (Fire Safety) - Volume 1: Dwellinghouses.
- Approved Document B (Fire Safety) - Volume 2: Buildings other than dwellinghouses.

Part F:

- Approved Document F - Ventilation.

Part L – Dwellings:

- Approved Document L1A: Conservation of fuel and power (New dwellings)
- Approved Document L1B: Conservation of fuel and power (Existing dwellings)

Part L – Buildings other than dwellings:

- Approved Document L2A: Conservation of fuel and power (New buildings other than dwellings)
- Approved Document L2B: Conservation of fuel and power (Existing buildings other than dwellings)

Scottish Building Standards approved technical handbooks:

Domestic Handbook:

- Section 2 – Fire
- Section 3 – Environment
- Section 6 – Energy

Non-domestic Handbook:

- Section 2 – Fire
- Section 3 – Environment
- Section 6 – Energy

5 Assembly and Installation

5.1 General information:

The MVHR should be aligned horizontally using a spirit level (for reliable condensate drainage).

The mains voltage must be 220-240V / 50-60 Hz.

If mounting on low density walls i.e. plaster boarded stud walls use the following fixing method:

- Use 15 mm nominal plywood backing board to connect directly to the wall internal frame stud and then mount the MVHR unit on the plywood.
- Ensure internal thermal or sound insulation is installed inside the stud wall to prevent reverberation.

The MVHR must be installed in a frost-free room preferably within the thermal envelope in order to keep heat losses via the MVHR surfaces and ventilation ducting to a minimum. Cellars, store rooms and insulated attics are suitable for this purpose.

The MVHR may only be installed in dry, non-explosion-proof rooms (protection category IP 20). The ambient temperature must not exceed +50°C.

This MVHR must not be fitted in rooms or areas of the house with strong odours, which could then permeate into the MVHR and contaminate the fresh air supplied from the MVHR.

The following criteria must also be met:

- Access is required for maintenance work (e.g. changing the filter)
- The condensate drain must be connected to a closed water trap and must have a sufficient gap. Approx. 50cm is ideal.
- If the condensate drain is located in a frost-prone area, then heat tracing must be provided.

5.2 Impact noise reduction:

With installation on wooden floors or other vibration-prone components, there may be combined impact noise (use foam rubber mounts).

5.3 Connecting the ducting:

To prevent the transmission of vibrations, the ducting should be connected flexibly to the MVHR (e.g. using flexible ducting or fabric duct fittings).

All ducting located in loft spaces and roof voids etc., which are unheated, must be insulated, together with the duct runs from the unit to atmosphere.

All ducting fitted to the spigots on the MVHR should be secured in place with jubilee clips or a suitably sized plastic cable tie.

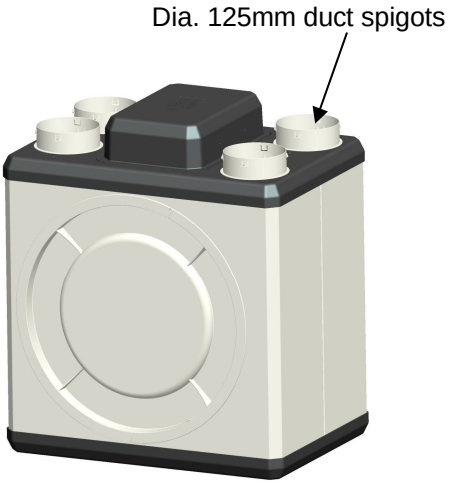

5.4 Duct connections:

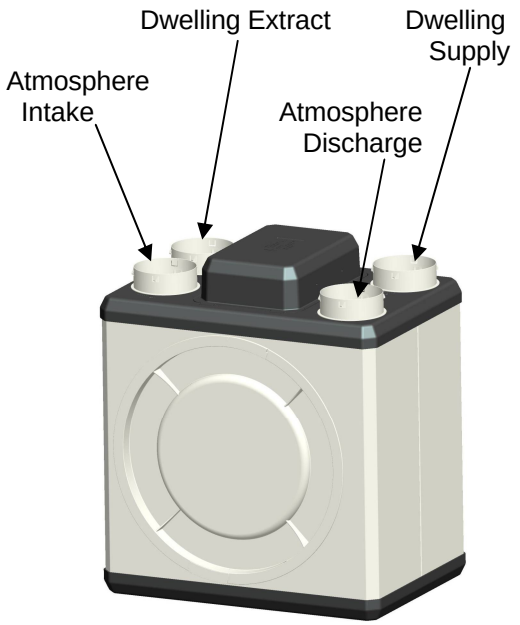

Right-handed installation duct connections

For ease of installation the duct connections are located on top of the MVHR.

- When viewed from the front of the MVHR in a right handed installation, the two duct connections on the left hand side are for:
  - Drawing in fresh air from the outside (Atmosphere Intake)
  - Extracting used air from the building (Dwelling Extract)
- When viewed from the front of the MVHR in a right handed installation, the two duct connections on the right hand side are for:
  - Extracting the used air out to atmosphere (Atmosphere Discharge)
  - Supplying the heated fresh air into the building (Dwelling Supply)
- The Xcell 150 MVHR can be installed right or left-handed without any additional modification, i.e. the mounting brackets supplied with the MVHR can be fitted to the front or the rear, and therefore the duct connections can be determined on-site. See the diagram below for the left hand duct connections.

5.4.1 Left-handed installation duct connections (viewed from the top of the MVHR)

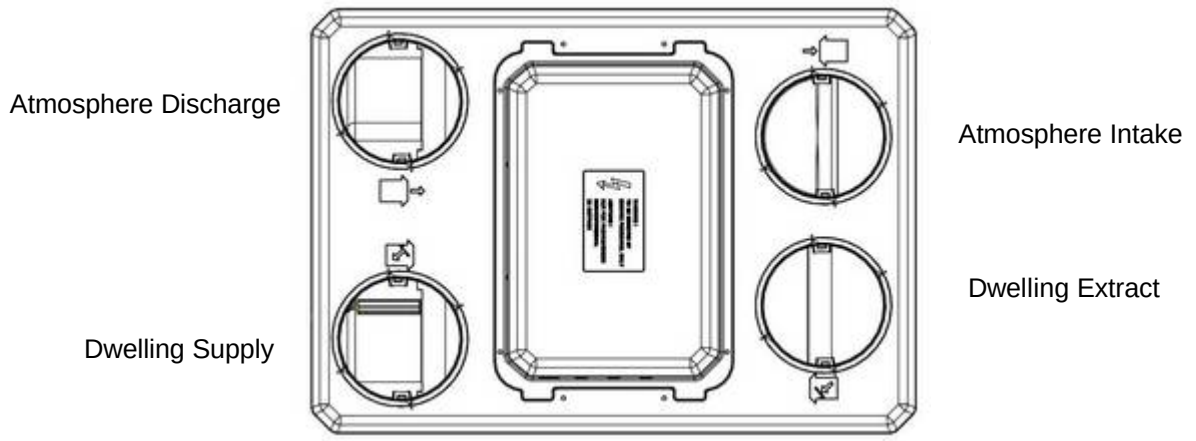

5.4.2 Retaining bracket to prevent extraction of the heat exchanger

Once the MVHR has been mounted in the right or left -handed orientation, the heat exchanger retaining bracket supplied (see picture below) must be fitted to the front of the MVHR as follows:

- Remove the round plastic access cover on the front of the MVHR by turning it to the left.
- Fit the retaining bracket and retaining screw supplied with the MVHR.
- Replace the maintenance cover by turning it to the right.

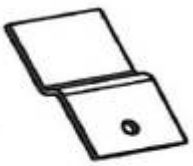

Important: The heat exchanger must only be removed for cleaning. Before removing the heat exchanger disconnect the MVHR from the mains supply.

5.5 Installation

5.5.1 Wall-mounting the MVHR

For wall-mounting the MVHR, three wall-mounting brackets are supplied.

- Mark out the fixing holes for the wall-mounting brackets using the diagram provided and drill the holes to suit the fixing screws to be used.
- Precisely align the three wall-mounting brackets on the wall using a spirit level and fix the three wall-mounting brackets to the wall with suitable fixing screws.
- Remove two screws from the top of the MVHR which align with the holes in the top wall-mounted bracket. Remove the four screws from the bottom of the MVHR which align with the slots in the two bottom wall-mounted brackets.
- Place the MVHR on the three wall-mounted brackets and fix in place by re-fitting the six screws previously removed.

5.5.2 Installation of the ducting

When installing ducting, care should be taken to ensure it is properly supported and secure with joints properly sealed. Flexible ducting should only be used for final connections with special care taken to avoid restrictions and other conditions which will restrict air flow.

5.6 Condensate drain

A condensate drain must be fitted to run to the building waste water system in accordance with the Building Regulation H1.

The condensate drain tube is connected to the MVHR through the hole on the underside of the plastic base. The condensate drain tube can be adapted to the installation requirements. It is important that the drain tube is positioned higher than the water surface of the water trap and that the drain tube ends within the water head of the water trap.

The condensate drain tube should be checked annually and cleaned if necessary. A condensate drain tube (Ø 20mm and 1.0m long) is supplied with each MVHR. The water trap must be purchased separately from a local plumbing stockist.

5.7 Typical installation example

- **Exhaust air** from the rooms (kitchen/bathroom/toilet)
- **Supply air** into the building (living rooms/bedrooms/children's rooms)
- **External air** (fresh air) with vapour diffusion-resistant insulation
- **Outgoing air** from inside to outside with vapour diffusion-resistant insulation

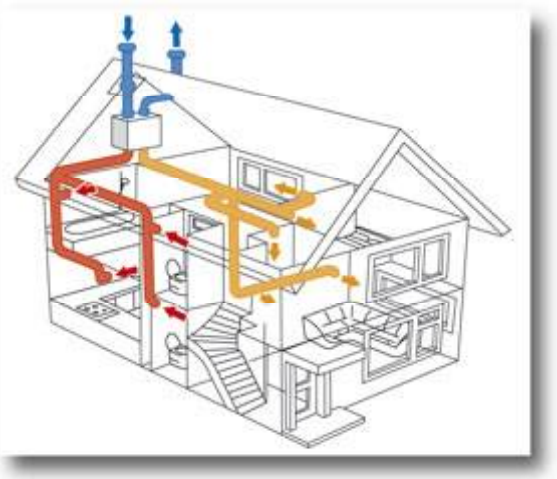

5.8 Installation dimensions

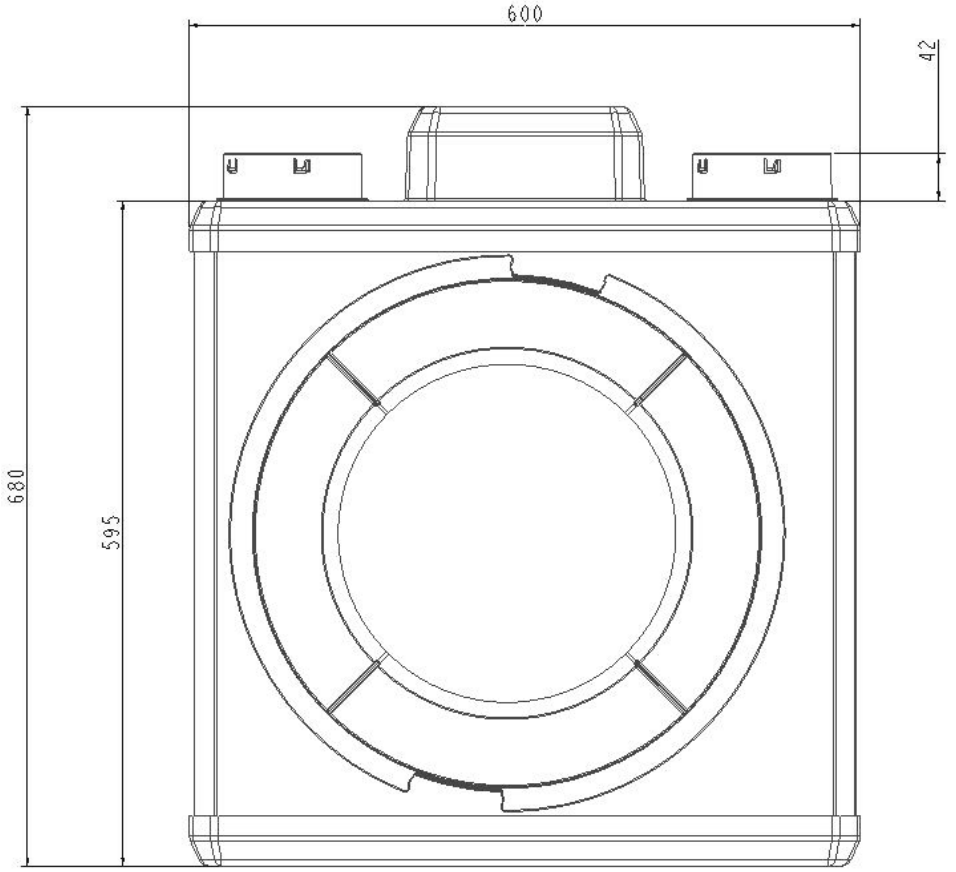

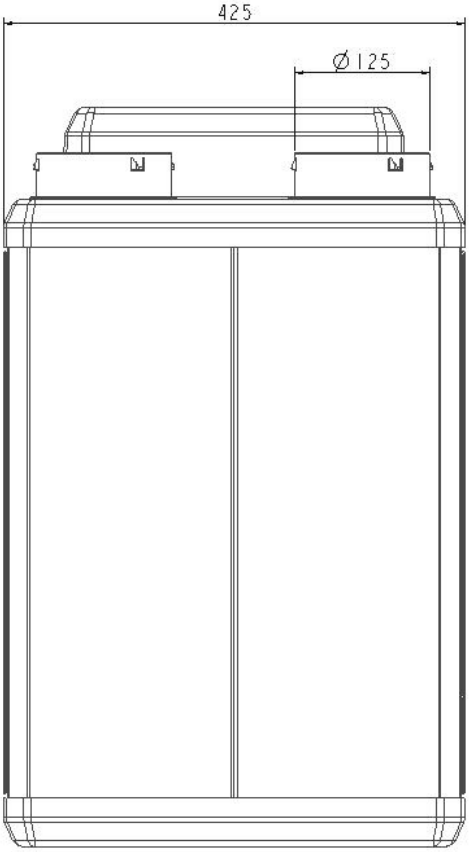

6 Technical Data

6.1 Air volume flow rates can be adjusted on the PCB <u>by service technicians only</u>:

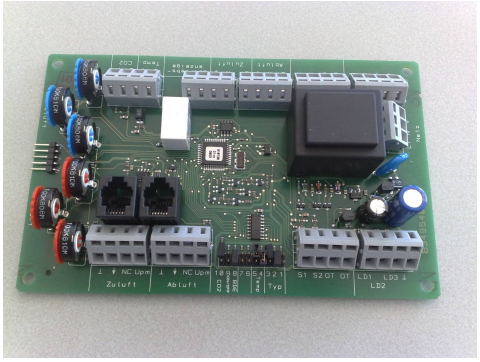

The adjustment potentiometers (3x blue) for the supply air fan and (3x red) for the exhaust air fan are shown on the picture opposite. Port pins for connection of the voltmeter are also provided.

6.2 Adjustment of air volume flow rate (m^3/h) for supply air / exhaust air fans:

Depending on the fan speed selected (1, 2 or 3) the EC fans have a specific control voltage of between 1.7 V minimum up to a maximum of 10.0 V. The control voltage for the supply air and exhaust air fans is adjusted via each set of three potentiometers on the PCB (speeds 1, 2 and 3).

S1 – Supply air speed 1 - blue pot	and	S 1 – Exhaust air speed 1 - red pot
S2 – Supply air speed 2 - blue pot	and	S 2 – Exhaust air speed 2 - red pot
S3 – Supply air speed 3 - blue pot	and	S 3 – Exhaust air speed 3 - red pot

Turning the potentiometer to the right increases the control voltage of the EC fans and turning it to the left reduces the control voltage.

6.3 Port pins for the connection of a voltmeter:

Via port pins on the PCB, the control voltage for each speed setting can be measured. The control voltage for the exhaust air and supply air fans can be set separately at between 1.7 V and 10.0 V as described above. See also the wiring diagrams in section 7.

6.4 Factory speed settings:

Speed 1: 50 m3/h - Low speed – preferably at night or during periods of absence
Speed 2: 100 m3/h - Normal daytime operation
Speed 3: 150 m3/h - Boost setting for increased air exchange

Note:
When the MVHR is being used with a manual 2-speed switch, only speeds 2 and 3 will apply.

6.5 Technical data:

Technical data	Units	Specification
Voltage / Frequency	V / Hz	~ 220-240V / 50-60 Hz
Max. current consumption	A	0.60
Power consumption - Speeds 1, 2, 3	W	26 / 48 / 80
Air – volume flow rate - Speeds 1, 2, 3	m³/h	50 / 100 / 150
Air volume flow rate at 90 Pa Static Pressure	Pa	150m^3/h
Protection category	IP	20
Max. ambient temperature	°C	50
Dimensions (without ducting) - W x H x D	mm	600 x 595 x 425
Weight of appliance	Kg	17.5
Air connections	mm	∅ 125
Condensate pipe connections	mm	∅ 20
Filter class	-	G4
Efficiency of heat exchanger	%	Up to 90%
Sound pressure level (measured at a distance of 1m) - Speeds 1, 2, 3 Sound pressure level (measured at a distance of 3m) - Speeds 1, 2, 3	dB (A)	29.5 / 32.0 / 39.0 20.0 / 22.5 / 29.5

6.6 Applied Energy accessories for manual or automatic operation:

Description	Part Number	Notes
MS2 controller	23513AW	The manual 2-speed switch is suitable for the Xcell 150 QV model only. This switch can be flush or surface mounted.
QCO$_2$ controller	96003AA	The CO$_2$ sensor is suitable for the Xcell 150 QVW model only. Only 1 off CO$_2$ sensor can be used per MVHR unit.
Q3SP controller	96005AA	The automatic 3-speed switch is suitable for the Xcell 150 QVW model only. This switch can be flush or surface mounted.
QHS sensor	96009AA	The Humidistat sensor is suitable for the Xcell 150 QVW model only. <u>Note:</u> 1. When using Humidistats in conjunction with the Q3SP 3-speed switch a maximum of 4 Humidistats can be connected. 2. When using Humidistats in conjunction with the Q3SP 3-speed switch and a CO$_2$ sensor a maximum of 3 Humidistats can be connected.
Air filter box (without filter)	45014AA	This additional filter box may be fitted to the MVHR system to protect allergy sufferers against environmental pollution with the use of finer filters. The filter box is installed immediately after the supply air outlet. Class F5 or F7 panel filters are available as the filter elements.
Class F5 panel filter for air filter box	95045AA	F5 filter used in the air filter box only.
Class F7 panel filter for air filter box	95047AA	F7 filter used in the air filter box only.
Defrost Heater Unit	44001AA	This defrost heater unit may be fitted to the MVHR ducting system to pre-heat the air intake from atmosphere to prevent the build up of ice in the heat exchanger when the external air temperatures are below freezing.

6.7 Applied Energy spares available:

Description	Part Number
Terminal Cover	44301SK
Heat Exchanger	44302SK
Motor (Outgoing Air)	44303SK
Motor (Supply Air)	44304SK
G4 Filters (pack of 2)	44305SK
Control PCB	44306SK
20mm Cable Clamp	44307SK
12mm Cable Clamp	44308SK

7 Electrical Wiring Diagrams

7.1 Manual 2-speed switch (Xcell 150 QV only)

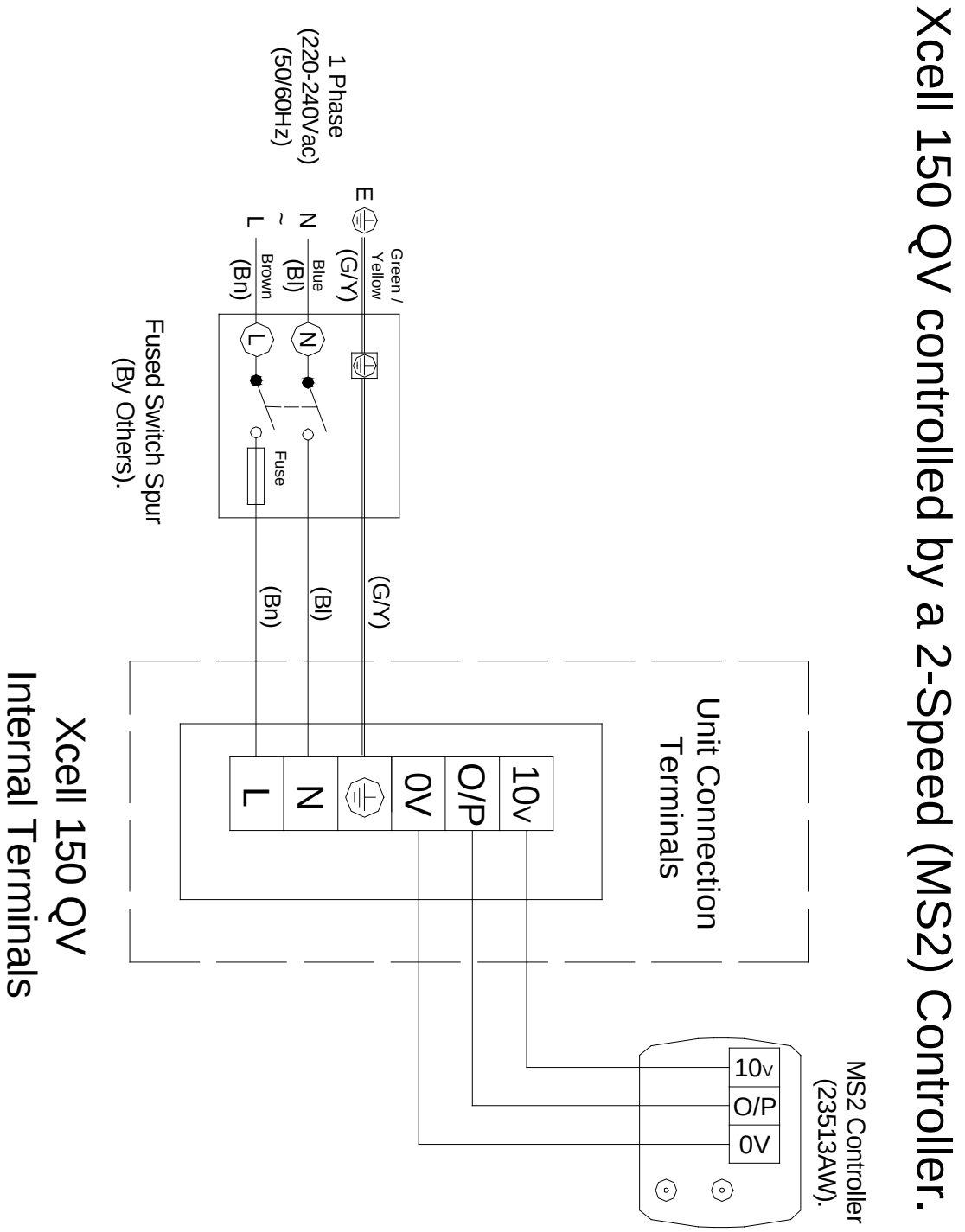

7.2 PCB with 3-speed switch (Xcell 150 QVW only)

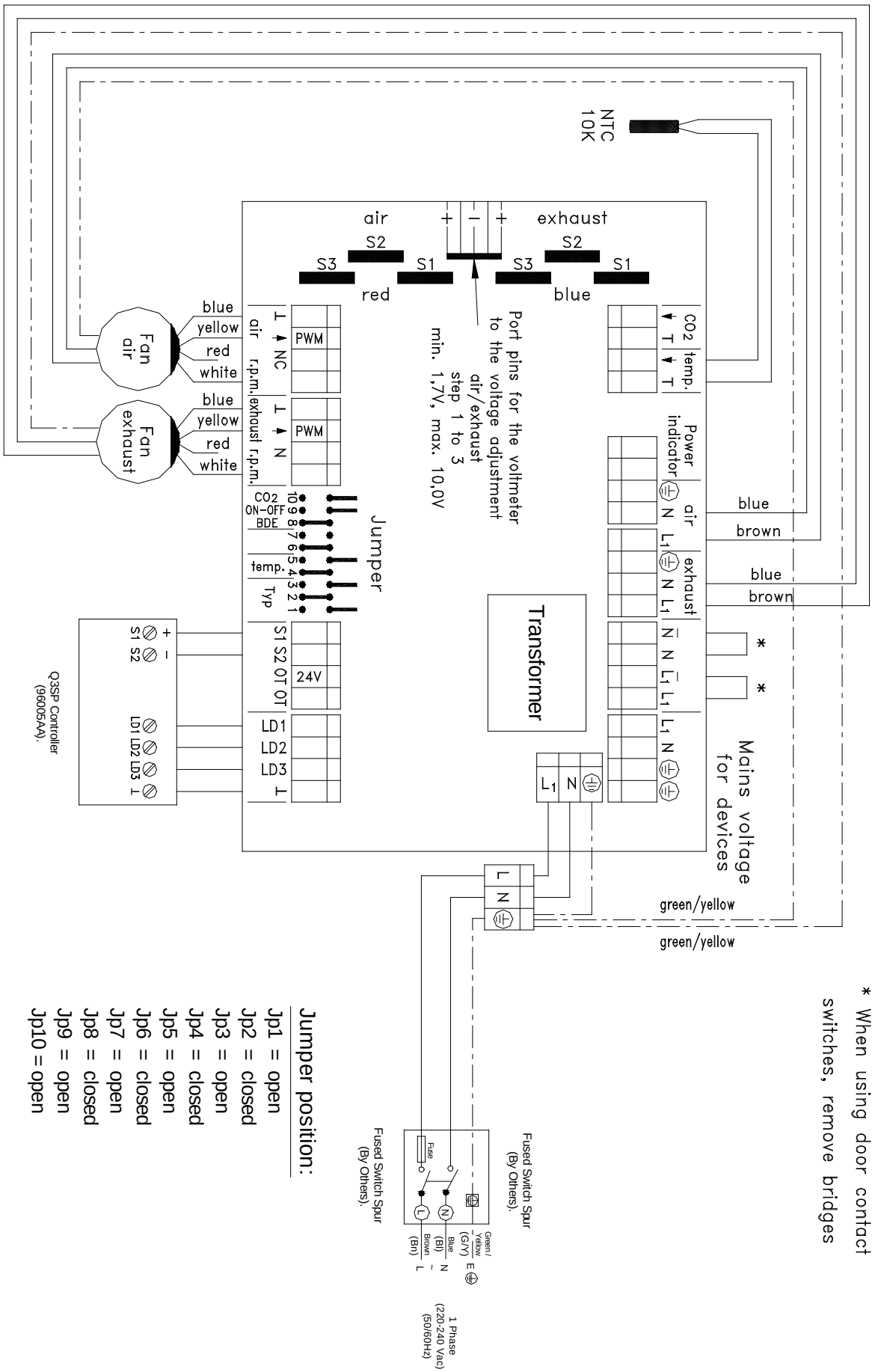

AEP Ref: Xcell 150-04e-a

7.3 PCB with 3-speed switch & CO_2 sensor (Xcell 150 QVW only)

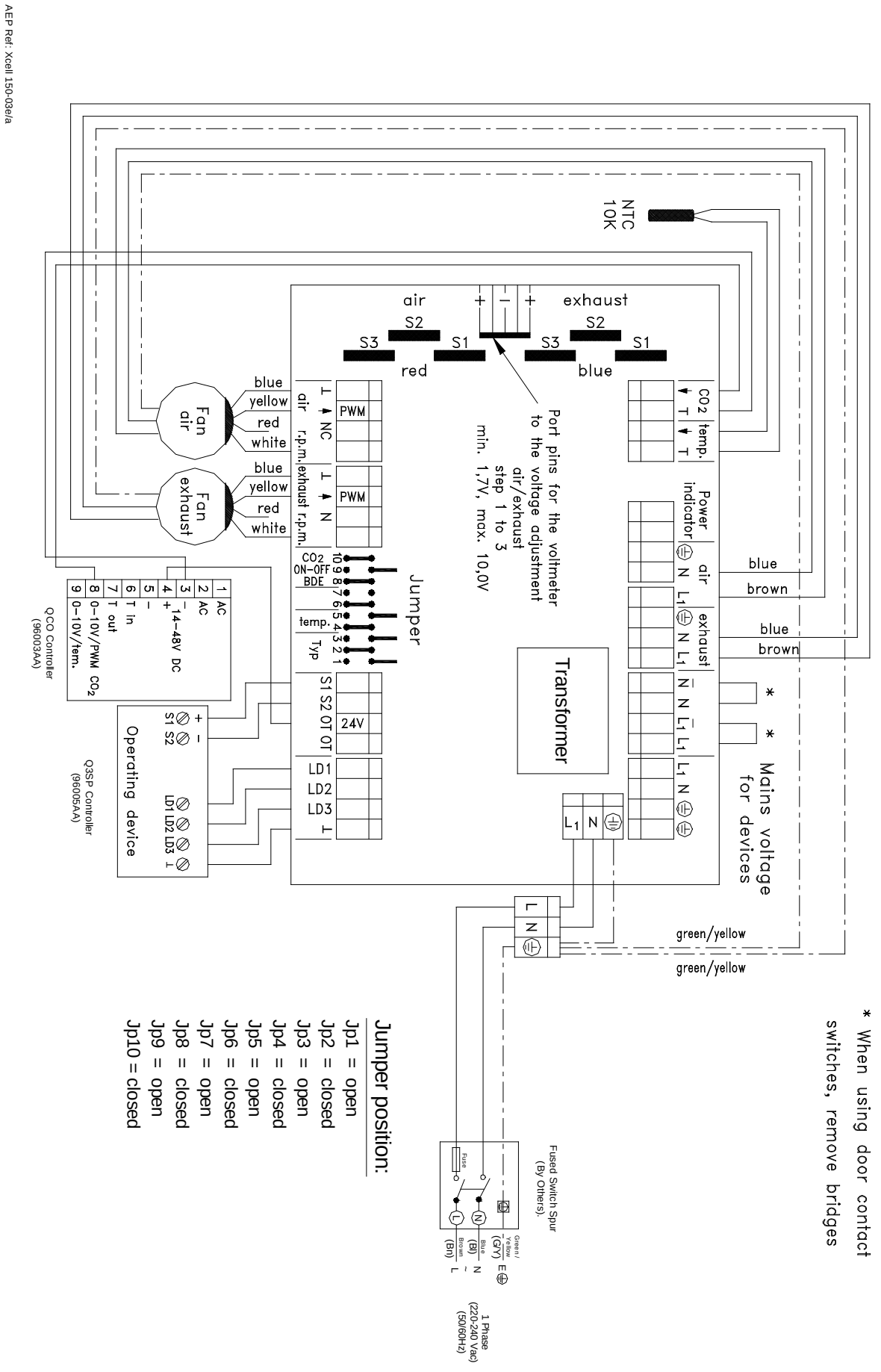

7.4 PCB with 3-speed switch, CO_2 sensor & up to 3 off Humidistats (Xcell 150 QVW only)

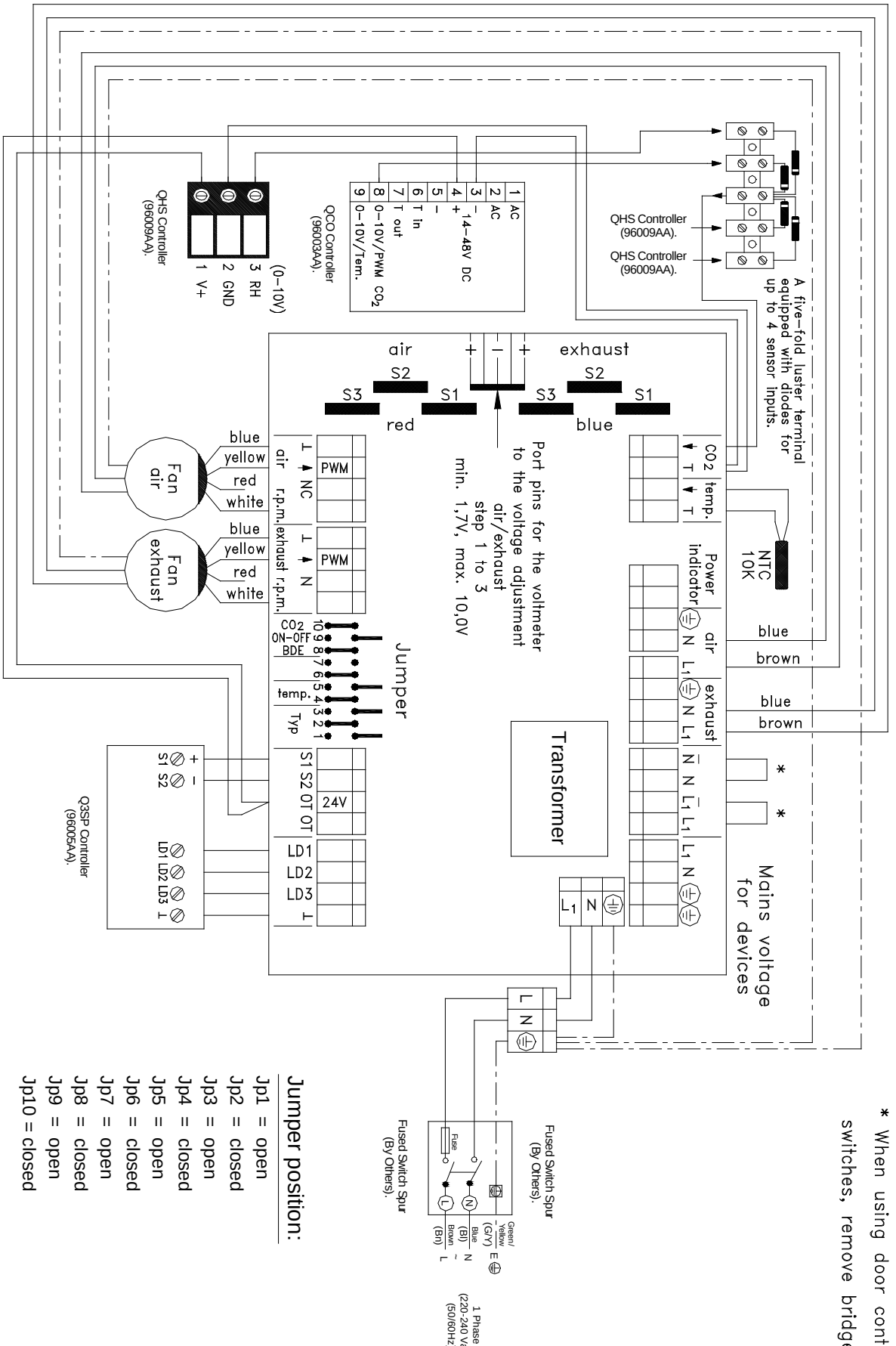

7.5 PCB with 3-speed switch & up to 4 off Humidistats (Xcell 150 QVW only)

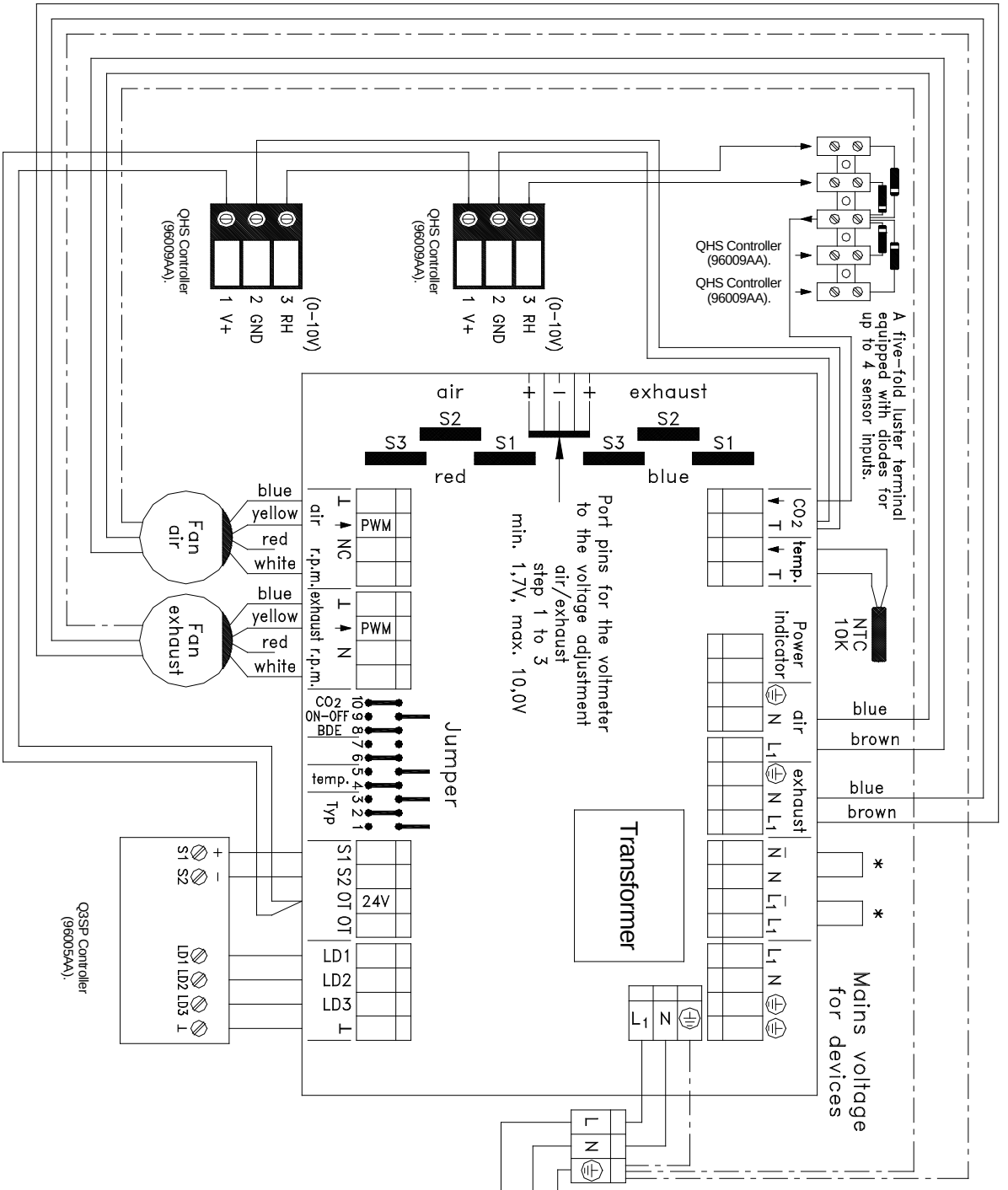

* When using door contact switches, remove bridges

Jumper position:

Jp1 = open
Jp2 = closed
Jp3 = open
Jp4 = closed
Jp5 = open
Jp6 = closed
Jp7 = open
Jp8 = closed
Jp9 = open
Jp10 = closed

8 Controller Functions

8.1 MS2 manual 2-speed switch

Refer to section 7.1 for the relevant wiring diagram. This switch option is for manual control only and therefore none of the automatic control accessories listed below are compatible with this switch.

Minimum size of 3-core cable to be used: Power supply – 1.5mm²
Switch – 0.5mm²
Note – use a spanner to tighten all cable glands

Settings:

- Speed 1: Normal operation
- Speed 2: Boost setting for increased air exchange

8.2 Q3SP automatic 3-speed switch

Refer to sections 7.2, 7.3, 7.4 and 7.5 for the relevant wiring diagrams and additional controllers that are compatible with the 3-speed switch. With jumper 8 selected on the PCB, the 3-speed switch is active.

Minimum size of 3-core cable to be used: Power supply – 1.5mm²
Switch – 0.5mm²
Note – use a spanner to tighten all cable glands

Key features:

- Plus and minus keys to manually change speed
- 3 LEDs for speed indication / white housing
- Up to 10 off 3-speed switches can be connected in parallel to each MVHR.

Indicators:

- Moisture Protection →LED 1 flashes briefly every second
  →**Important:** an interval time is programmed into the Moisture Protection setting.
  →Interval time: 17 mins. ON
  13 mins. OFF, etc.
- Speed 1 →LED 1 on
- Speed 2 →LED 2 on
- Speed 3 →LED 3 on
- MVHR OFF* →LEDs 1+2+3 off
- Filter service →LED 1 flashes quickly continuously (until reset as described below)
- Timer reset →LEDs 1+2+3 flash 5 times in quick succession (to acknowledge reset is complete)
- Fault alarm →LEDs 1+2+3 flash every second
- Fault alarm reset →Mains voltage briefly interrupted

Settings:

- MVHR On* →Press plus key
- MVHR Off* →Press minus key until speed 0 is reached, i.e. 3>2>1>Moisture Protection>0, MVHR OFF
- Reset timer →Press plus and minus keys together and hold for 2 seconds
- Speed 3 →Speed 3 time-limited (only when no other controllers are used alongside the 3-speed switch): after 1 hour, the MVHR automatically switches back to fan speed 2

- On/off function (only possible when no other controllers are used alongside the 3-speed switch) can be disabled with jumper 9 on the PCB. This means the speed switches from Ventilation to Moisture Protection – the lowest fan speed.

Filter service indicator:

The period for the filter service timer (3 months) is set and stored and cannot be changed.
Once the period of 3 months has expired, the switch will indicate that a filter serice is necessary whereby the LED for fan speed 1 flashes every second.
Once the filter has been successfully serviced i.e. cleaned or changed, the filter service timer on the switch can be reset by pressing both OPERATING KEYS (and holding for 2 seconds) and the filter service indicator on the switch will go out. Resetting is acknowledged by LED 1 flashing quickly 5 times.

In the event of a full MVHR service outside the above 3 month period, the timer can also be reset, without the filter service timer having completed its runtime, by pressing both operating keys together and holding for 10 seconds. Resetting is acknowledged by LED 1 flashing quickly 5 times.

8.3 QCO$_2$ CO$_2$ Sensor

The CO_2 sensor will only function in conjunction with the automatic 3-speed switch, refer to sections 7.3 and 7.4 for the relevant wiring diagrams and associated controllers that are compatible with the CO_2 sensor. With jumper 10 selected on the PCB, the CO_2 sensor is active.

Minimum size of 3-core cable to be used:	Power supply – 1.5mm²
	Switch – 0.5mm²
	Note – use a spanner to tighten all cable glands

The MVHR only reacts to the CO_2 sensor when fan speed 2 is activated on the 3-speed switch. Fan speed 2 is always displayed on the 3-speed switch, regardless of whether the CO_2 values are displayed as <900 ppm (speed 1) or >1100 ppm (speed 3) on the CO_2 sensor. With this setting, the CO_2 sensor is always prioritised. As soon as the Moisture Protection speed, speed 1 or speed 3 is manually activated on the 3-speed switch, the CO_2 sensor is deactivated.

Switchpoints of the CO_2 sensor:

> 1.5 V MVHR switches from speed 2 to speed 1;	< 900 ppm
> 5.0 V MVHR switches from speed 1 to speed 2;	> 1000 ppm
> 7.5 V MVHR switches from speed 2 to speed 3;	> 1100 ppm
< 5.0 V MVHR switches from speed 3 to speed 2;	< 1000 ppm

8.4 QHS humidistat sensor

Refer to sections 7.4 & 7.5 for the relevant wiring diagram.

Minimum size of 3-core cable to be used:	Power supply – 1.5mm²
	Switch – 0.5mm²
	Note – use a spanner to tighten all cable glands

This product is designed to measure humidity and temperature in indoor applications.
It uses a capacitive sensor element for the humidity measurement. The humidistat housing can be fixed directly on the wall or flush mounted.

Note:
When using humidistats in conjunction with the 3-speed switch a maximum of 4 humidistats can be connected.
When using humidistats in conjunction with the 3-speed switch and a CO_2 sensor a maximum of 3 humidistats can be connected.

8.5 Automatic defrost (anti-icing protection)

In order to prevent the heat exchanger from freezing when the outside temperature is low, a frost protection monitor has been integrated (Xcell 150 QVW models only).

Two temperature ranges can be set via the PCB jumpers 4 and 5 (see table below).

Option 1 (Factory default setting):

If the temperature in the outgoing air duct falls below 4°C the supply air fan will stop (the exhaust air fan will remain on). When the outgoing air temperature reaches 7°C again the supply air fan comes back on automatically.

Option 2:

If the temperature in the outgoing air duct falls below 6°C the supply air fan will stop (the exhaust air fan will remain on). When the outgoing air temperature reaches 9°C again the supply air fan comes back on automatically.

Settings table:

Option	Temperature (outgoing air)	Temperature (outgoing air)	Jumper 4	Jumper 5
1	+ 4°C	+ 7°C	1	0
2	+ 6°C	+ 9°C	1	1

8.6 Fan fault monitoring

Should the external air / supply air fan fail, the exhaust air / outgoing air fan will switch off automatically.

Fault indication:

On the 3-speed switch, all 3 LEDs will flash.

Should the exhaust air / outgoing air fan fail, the external air / supply air fan does not switch off.

Fault indication:

On the 3-speed switch, all 3 LEDs will flash.

Using the ^ key, the external air / supply air fan speed can be switched down in stages until OFF is reached, whereby the fault indicator will also go out.

Resetting is executed by briefly switching off the mains voltage.

9 Maintenance

9.1 Filters

The MVHR should never be operated without filters. However, depending on the actual volume of contaminants in the environment, the filters (external air and exhaust air from the MVHR) need to be checked and cleaned at least twice a year and replaced at least on an annual basis. The original external / exhaust air filters contain G4 filter fibre enclosed in a cardboard frame. Replacement G4 filters are of a frameless moulded construction. Contact details for authorised servicing by Xpelair approved technicians can be found on the back of this booklet.

9.2 Removing and re-fitting the filters

- Disconnect the MVHR from the mains supply.
- Remove the Access Hatch by turning it to the left.
- Remove the two filters from the MVHR (external air and exhaust air - see picture below).
- Insert cleaned or new filters into their correct positions in the MVHR. Please note the clean side of the filter is placed next to the Heat Exchanger.
    - Filters can be cleaned by gently knocking together to remove dust / dirt.
- Replace the Access Hatch.
- Switch the mains supply back on.
- The MVHR is ready to recommence operation.

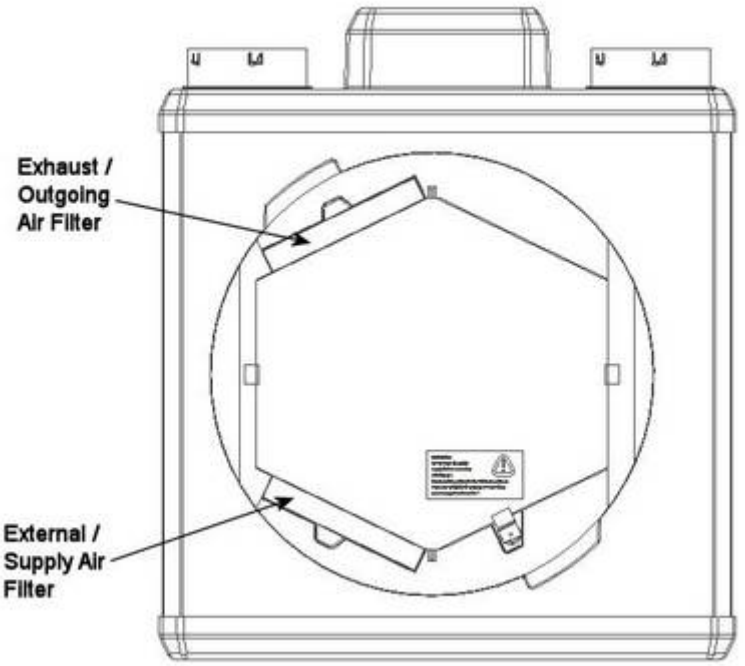

9.3 Air Filter Box (optional extra accessory)

The MVHR is fitted with G4 filters as standard. To protect allergy sufferers against environmental pollution, for example, it may be useful to install a filter box with finer filters. These filters are designed to offer the longest service life and lowest pressure loss and are installed in a box immediately after the supply air outlet. Class F5 or F7 panel filters are available as the filter elements. The fine filters should be checked along with the appliance filters. Please contact the UK sales office for further details, contact details can be found on the back of this booklet.

<u>Please note:</u>

If the external air is drawn in via a geothermal heat exchanger, a G4 class filter should be installed in the intake tower.

9.4 Cleaning the heat exchanger

The heat exchanger should be cleaned by a specialist technician as and when required depending on the level of contamination, but at least every 2 years. Contact details for authorised servicing by Xpelair approved technicians can be found on the back of this booklet.

- Disconnect the MVHR from the mains supply.
- Remove the Access Hatch by turning it to the left.
- Remove the retaining bracket located in front of the Heat Exchanger by removing the screw.
- Carefully pull the Heat Exchanger out forwards, keeping it horizontal to avoid damaging the EPP housing.
- Thoroughly rinse the Heat Exchanger with lukewarm water and allow all the water to drain off.
- Residual moisture will evaporate when the MVHR is operated.
- Carefully insert the cleaned Heat Exchanger, keeping it horizontal to avoid damaging the EPP housing.
- Replace the Heat Exchanger retaining bracket and retaining screw.
- Replace the Access Hatch.
- Switch the mains supply back on.
- The MVHR is ready to recommence operation.

10 Malfunctions

Important: Servicing of the MVHR may only be carried out by a qualified service technician. Contact details for authorised servicing by Xpelair approved technicians can be found on the back of this booklet.

10.1 Fault locating table

FAULT / MALFUNCTION	CHECK	POSSIBLE CAUSE
Supply air or exhaust air fan does not work	The mains supply is on and all 3 LEDs on the 3-speed switch are flashing.	- External air / supply air fan defective - Exhaust air / outgoing air fan defective - Fan blade catching on inner EPP housing - PCB defective (Xcell 150 QVW models only) - Contact fault on motor lines
Supply air or exhaust air fan does not work	The mains supply is on and no LEDs on the 3-speed switch are flashing.	- Mains supply interrupted - Contact fault - Fuse has blown
Air volume flow rate (m^3/h) in supply air or exhaust air is too low	LED on the 3-speed switch is flashing - filter service indicated.	- Filter service period has expired
No water coming through condensate drain hose	Drops of water on the underside of the MVHR	- No water in siphon - Condensate water drain blocked
Noise coming from the MVHR	Fans are noisy	- Increased air resistance due to contaminated filters / heat exchanger - Obstruction in the duct system - Room air regulator valves not open wide enough - Fan blade touching inner EPP housing

This table is subject to technical amendments

10.2 Installation of replacement fans

Should either fan develop a fault and need to be replaced please contact the UK sales office to order replacement fans or the UK Customer Care / Technical helpline to arrange for fan replacement by Applied Energy Products Limited, or our approved agents, contact details can be found on the back of this booklet.

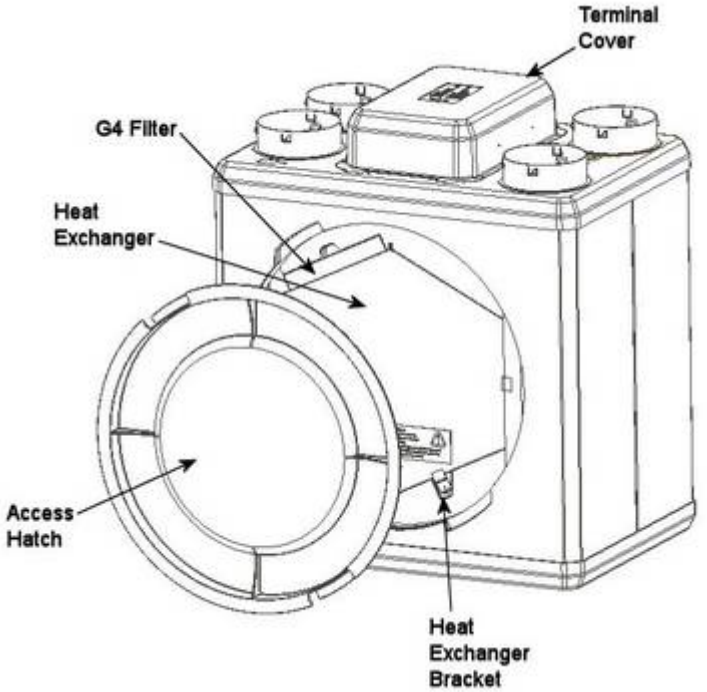

1. Disconnect the MVHR from the mains supply.
2. Twist anti-clockwise & remove the Access Hatch.
3. Remove the 2 off G4 Filters.
4. Remove the Heat Exchanger Retaining Bracket retaining screw.
5. Remove the Heat Exchanger Retaining Bracket.
6. Remove the Heat Exchanger carefully, keeping it horizontal to avoid damaging the EPP housing.
7. Remove the 4 off Terminal Cover retaining screws.
8. Remove the Terminal Cover.

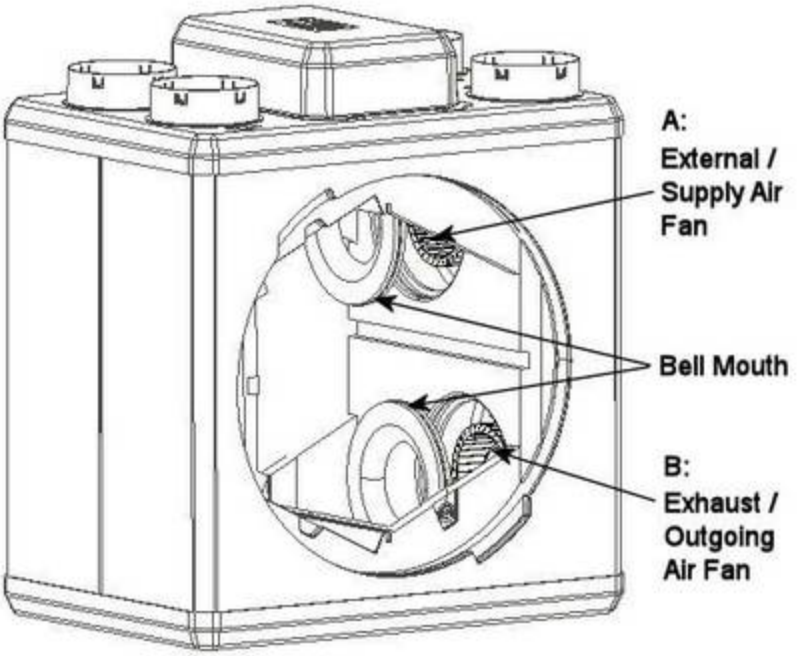

9. The following procedure applies to both MVHR fans, only remove remove faulty fans from the MVHR:
   a) Identify the faulty fan within the MVHR.
      Note: The upper fan (A) provides the external / supply air and the lower fan (B) provides the exhaust / outgoing air.
   b) Disconnect the power and control leads of the faulty fan from the PCB (Xcell 150 QVW model only) or Terminal Block (Xcell 150 QV model only), whichever applies. Refer to Section 7 for the relevant wiring diagram to correctly identify which leads to disconnect for each fan.

c) Firmly attach string to the two leads of the faulty fan.
   Note: The string, at least 3 metres long, must be secured tightly but not in a way that will become jammed when pulled through the cable channels inside the unit i.e. no large tied knots.
d) Remove the Bell Mouth covering the faulty fan.
   Note: Insert a flat bladed screwdriver into the recess on the edge of the Bell Mouth & lever it out carefully to avoid damaging the EPP housing.
e) Remove the 3 off retaining screws of the faulty fan.
f) Push the leads of the faulty fan down into the top of the MVHR by around 30mm.

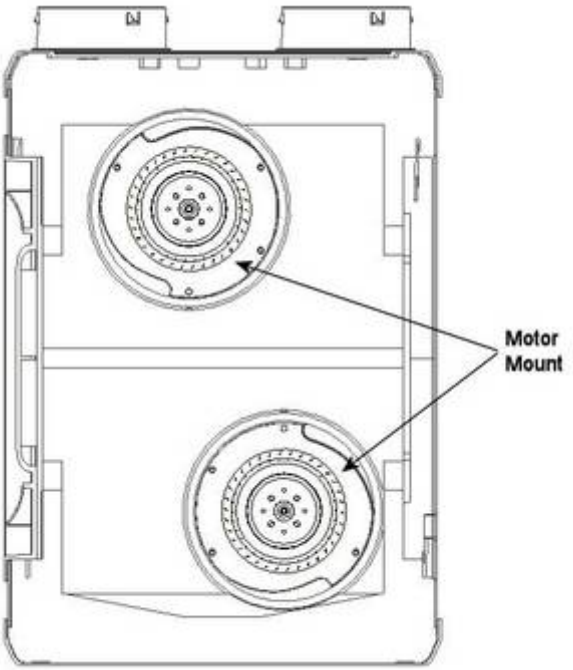

g) Remove the faulty fan (attached to the plastic Motor Mount) also pulling through the faulty fan leads and attached string.
h) Remove the 4 off retaining screws to remove the plastic Motor Mount from the faulty fan, note the orientation of the faulty fan and it's leads in relation to the slots in the plastic Motor Mount.
i) Assemble the plastic Motor Mount to the new fan & secure with the 4 off retaining screws.
j) Untie the string from the faulty fan leads and attach to the new fan leads.
k) Position new fan in the MVHR, pulling through the string & fan leads to take up the slack as it's moved into place. Ensuring that the plastic Motor Mount is correctly orientated and is flat against the EPP housing.
l) Secure the new fan into place with the 3 off retaining screws.
m) Remove the string from the new fan leads.
n) Connect the power and control leads of the new fan to the PCB / Terminal Block (whichever applies). Refer to Section 7 for the relevant wiring diagram to correctly identify where to reconnect the power / control leads.
   Note: Fan leads may be need to be cut to length.
o) Replace the Bell Mouth, push gently into the EPP housing but ensure it is clips into place.
p) Spin the blades of the new fan to ensure that it moves freely and is not obstructed in any way. If any obstruction is present the fan has not been positioned correctly within the EPP housing. Dismantle again to correctly fit ensuring that the plastic Motor Mount is correctly orientated and is flat against the EPP housing.

10. Repeat step 10 for the other fan should both fans need replacing. It is recommended that only one fan is replaced at a time.
11. Replace the Terminal Cover and secure with the 4 off fixing screws.
    Note: Ensure no leads or cables are trapped underneath the Terminal Cover before securing.
12. Replace the Heat Exchanger carefully, keeping it horizontal to avoid damaging the EPP housing.
13. Replace the Heat Exchanger Retaining Bracket & retaining screw.
14. Replace the 2 off G4 Filters.
15. Replace the Access Hatch and turn clockwise to secure.
16. Switch the mains supply back on.
17. The MVHR is ready to recommence operation.

11 Customer Notes (to record details of filter / recuperator cleaning etc.)

Maintenance Log		
Date	**Action**	**Signature/ Stamp**

This Xpelair MVHR was purchased from:

Supplier stamp

On _____(date)

GUARANTEE

Terms and Conditions for UK & ROI (outside UK & ROI contact your local distributor)

We, Applied Energy Products, guarantee this product against faulty workmanship and material defects for a period of 5 years from the date of purchase subject to regular servicing by by Applied Energy Products Limited, or our approved agents.

In the event of a product breakdown during the guarantee period, you should initially contact your installer, before contacting Applied Energy Products on the Technical line number below providing that:

a) The product has been installed in a residential or light commercial environment.

b) The product has been correctly installed and commissioned in accordance with our instructions and is being used on the supply circuit or voltage printed on the rating plate.

c) The product has been used in accordance with these instructions and has not been tampered with or otherwise subject to misuse, neglect or accident.

d) The product has been regularly maintained in accordance with these instructions and the airway is unobstructed.

e) The product has not been taken apart, modified or repaired except by a person authorised by us.

f) Evidence of the date of purchase in the form of an invoice or receipt will be required in order to qualify under the terms of this guarantee.

g) For the service work to be undertaken free of charge, the work must only be undertaken by Applied Energy Products Limited, or our approved agents.

h) Service under guarantee has no effect on the expiry date. The guarantee on any exchanged parts or product ends when the original guarantee period ends.

i) In the event of a product being returned to Applied Energy Products Limited and not found to be faulty, the product would be available for collection from the relevant premises within one month and if not collected it would be disposed of or delivered by Applied Energy Products Limited and a delivery charge made.

EXCLUSIONS

This guarantee does not apply to the repair or replacement of Filters, Accessories, Isolating switches, Electrical cable, Fuses and/or Circuit breakers or annual servicing.

This guarentee covers products supplied by Applied Energy Products only and does not cover other products and components used to create a system that have not been purchased from Applied Energy Products.

The responsibility for the suitability of the complete system for the specific application remains the responsibility of the original specification engineer.

This guarantee does not cover damage or defects arising from poor or incorrect installation, improper use or lack of maintenance. It is the responsibilty of the installer to check that the installation parameters meet the requirements of the product, and any relevant regulations.

If we are called out to a fault, which is subsequently identified as being an installation fault, we will make a charge. It is important that the routine checks are completed before calling us out, as many issues can be simply diagnosed and resolved.

We make no guarantees as to response times for repairs. We will endeavour to achieve the most timely response possible but while we indicate an average response time, this should not be taken as a guarantee.

The guarantee applies to a repair or replacement (at our discretion) of the product subject to the conditions above, and does not cover compensation for the loss of the product or consequential loss of any kind.

This guarantee does not affect your statutory rights.

Booklet 23515AA Rev. A

Applied Energy Products Limited
Morley Way
Peterborough
PE2 9JJ

Customer Care / Technical Line: 0844 372 7766
Customer Care / Technical Fax: 0844 372 7767
Sales Line: 0844 372 7750
Sales Fax 0844 372 7760
www.applied-energy.com

Xpelair is a registered trademark of Applied Energy Products Limited.
Applied Energy Products reserve the right to alter product specifications or appearance without prior notice. All finishes and diagrams in this booklet are as accurate as printing processes allow.